Product data sheet
Characteristics

SSRHD10
Harmony, Heat sink, DIN rail mount, thermal resistance 1 °C/W

Green Premium

Product availability: Non-Stock - Not normally stocked in distribution facility

Price*: 41.60 USD

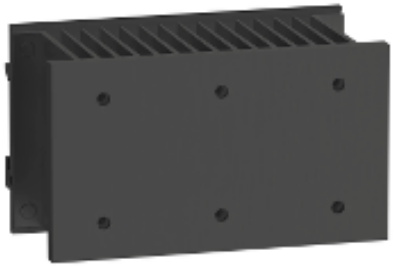

Main

Range of product	Harmony Solid State Relays
Product or component type	Heat sink

Complementary

Product compatibility	1 solid state relay SSR panel
Thermal resitance	1 °C/W
Mounting support	DIN rail
Material	Aluminium
Surface finish	Black anodized
Surface and useful surface	220.88 In² (1425 cm²)
Number of mounting holes	6 UNC 8-32
Tightening torque	15.05…19.47 Lbf.In (1.7…2.2 N.m)
Sale per indivisible quantity	1
Width	3.00 In (76.2 mm)
Height	5.20 In (132.1 mm)
Depth	2.37 In (60.2 mm)
Net Weight	1.39 Lb(US) (0.630 kg)

Ordering and shipping details

Category	22375 - INTERFACE MODULE(ABA,R,S)
Discount Schedule	CP2
GTIN	03606480580246
Nbr. of units in pkg.	1
Package weight(Lbs)	6.50 Lb(US) (2.95 kg)
Returnability	No
Country of origin	CN

The information provided in this documentation contains general descriptions and/or technical characteristics of the performance of the products contained herein.
This documentation is not intended as a substitute for and is not to be used for determining suitability or reliability of these products for specific user applications.
It is the duty of any such user or integrator to perform the appropriate and complete risk analysis, evaluation and testing of the products with respect to the relevant specific application or use thereof.
Neither Schneider Electric Industries SAS nor any of its affiliates or subsidiaries shall be responsible or liable for misuse of the information contained herein. *Prices are indicative

Packing Units

Unit Type of Package 1	PCE
Package 1 Height	3.03 In (7.7 cm)
Package 1 width	10.63 In (27 cm)
Package 1 Length	11.30 In (28.7 cm)

Offer Sustainability

Sustainable offer status	Green Premium product
California proposition 65	WARNING: This product can expose you to chemicals including: Nickel compounds, which is known to the State of California to cause cancer, and Di-isodecyl phthalate (DIDP), which is known to the State of California to cause birth defects or other reproductive harm. For more information go to www.P65Warnings.ca.gov
REACh Regulation	REACh Declaration
REACh free of SVHC	Yes
EU RoHS Directive	Pro-active compliance (Product out of EU RoHS legal scope) EU RoHS Declaration
Toxic heavy metal free	Yes
Mercury free	Yes
RoHS exemption information	Yes
China RoHS Regulation	China RoHS Declaration
Environmental Disclosure	Product Environmental Profile

SSRHD10

Dimensions

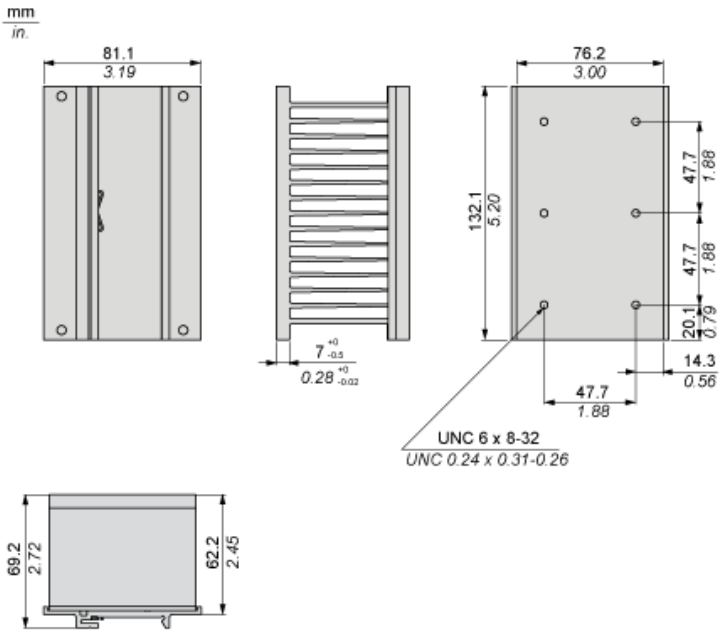

Product Life Status :	Commercialised